PRODUCT DATA SHEET

V12 LIGHTBAR

Designed for the off road / 4×4 enthusiast, TYRI's modular light bar has a slim design and replaceable lens, making it ideal for the off road environment. This light can be bracket or surface mounted and the end pieces are removable for maximum flexibility in mounting options.

Providing 4,300 effective lumen light output, this stylish and powerful unit will light your way to adventure.

Available with standard reflector, standard reflector with fog lens (yellow) and black reflector.

TECHNICAL DATA

Housing Material:	Cast Aluminium
Mounting Options:	Hanging Standing Flush
Lens Material:	Polycarbonate
Temperature range:	-40 to +85 °C
Connector:	Deutsch (DT04-2P) built in. Mating part: DT06-2S
Weight:	1.7 kg / 3.75 lb
Light Patterns:	Narrow Symmetric

FEATURES

- Overheating Protection
- Over-voltage Protection
- Polarity Protection
- CE - marked

TEST STANDARDS

- Salt Spray ASTM B117 500 h
- Vibration 10-1000 Hz 3 Axis, 5 Grms
- Shock Tested 50 G 11 ms
- IP69K
- EN55025/CISPR 25 Class 5
- R10, see below

For further infomation visit www.tyrilights.com or contact your local sales team.

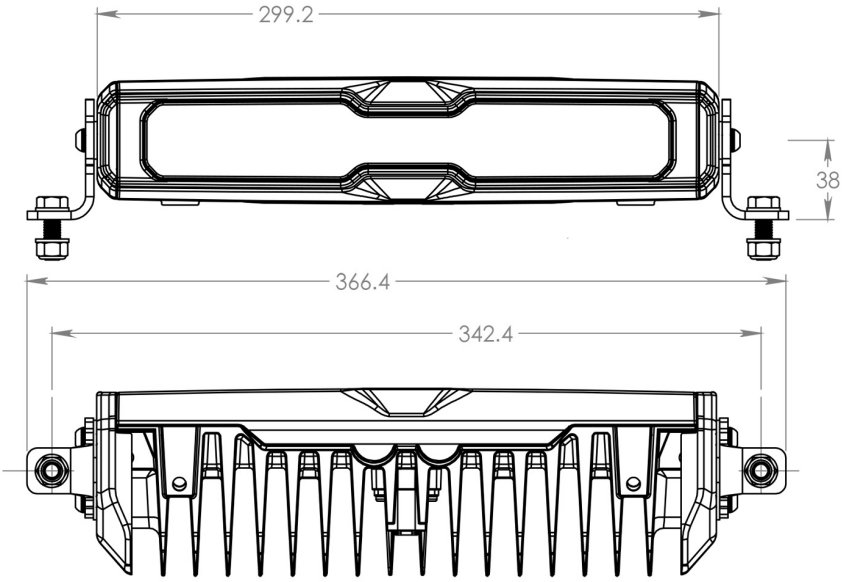

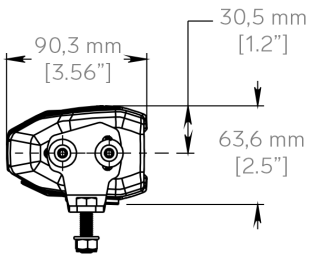

PDS-V12-202510-1-EN

V12 LIGHTBAR

LIGHT OUTPUT	VOLTAGE		AMP DRAW		POWER	COLOUR TEMPERATURE	EMC	ECE
Effective Lumen	Machine	Operating	12 V	24 V	Watts	K	EN55025 / CISPR25	ECE Rating
4,300 eLm	12 V	9-16 V	5.8 A	-	70 W	5,700 K	5	R10
4,300 eLm	24 V	18-36 V	-	2.9 A	81 W	5,700 K	5	-

TYPICAL LIGHT PATTERNS

Example for V12 Lightbar / 4,300 effective lumen

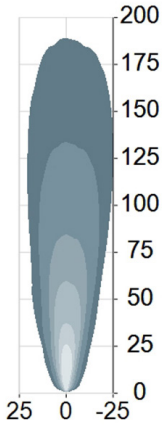

V12 Lightbar / 4,300 eLm
Narrow, 0-30°
3.0 m / -15°
Symmetric

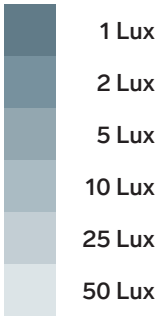

LED work lights are exposed to dirt, fertilizers, road salt, acids and more. For best performance and long lifetime, the lens and the cooling fins must be cleaned on a regular basis.